Diaphragm pressure gauge
Grey cast iron case
Models 422.12, 423.12

for further approvals see page 3

Applications

- For measuring points with increased overload
- The model 423.12 with liquid-filled case is suitable for high dynamic pressure loads and vibrations
- For gaseous and liquid media
- For mining, environmental technology, machine building and general plant construction
- With the open connecting flange option also for contaminated and viscous media

Special features

- Compatible with switch contacts
- Threaded or open flange process connection
- Scale ranges from 0 … 16 mbar

Diaphragm pressure gauge model 422.12

Description

Diaphragm pressure gauges are preferably used for low pressure ranges. Through the large working surface of the circular, corrugated diaphragm element, small pressure ranges can be measured reliably.

The diaphragm pressure gauges are manufactured in accordance with EN 837-3. The robust design is particularly suitable for applications in machine building, plant construction and in the water and wastewater industry.
The upper measuring flange with case and the lower measuring flange are made from one cast part, respectively.

The instrument is used for the measurement of gaseous and liquid media that will not attack cast steel.

For the measurement of highly viscous, crystallising or contaminated media, the use of an open connecting flange is recommended. The open connecting flange has the advantage over a threaded connection that the pressure port cannot become blocked. With an additional flushing connection on the open connecting flange, the pressure chamber can be easily cleaned.

Measuring systems with diaphragm elements, on the grounds of their design, offer good protection from overload, since the diaphragm can support itself against the upper flange. As standard, the diaphragm pressure gauges already feature an overload safety of 3 times the full scale value. Optionally, higher overload safeties can be realised.

Data sheets showing similar products:
Electrical switch contacts; models 821, 831, 851 and 830 E; see data sheet AC 08.01
Diaphragm pressure gauge, for the process industry; model 432.50; see data sheet PM 04.03
Elastic element pressure gauges; see data sheet IN 00.01

Specifications

Design
EN 837-3

Nominal size in mm
100, 160

Accuracy class
Model 422.12: 1.6
Model 423.12: 2.5 (option 1.6)

Scale ranges
0 ... 16 mbar to 0 ... 250 mbar (flange Ø 160 mm)
0 ... 400 mbar to 0 ... 40 bar (flange Ø 100 mm)
or all other equivalent vacuum or combined pressure and vacuum ranges

Pressure limitation
Steady: Full scale value
Fluctuating: 0.9 x full scale value

Overload safety
3 x full scale value, however max. 40 bar

Permissible temperature
Ambient: -20 … +60 °C
Medium: +100 °C maximum
Storage: -40 ... +70 °C
(scale ranges ≤ 60 mbar: -20 ... +70 °C)

Temperature effect
When the temperature of the measuring system deviates from the reference temperature (+20 °C): max. ±0.3 %/10 K of the span

Ingress protection per IEC/EN 60529
Model 422.12: IP54
Model 423.12: IP65 (with liquid filling)

Process connection with lower measuring flange
Steel, lower mount, G ½ B (male), SW 27

Pressure element
≤ 2.5 bar: Stainless steel 1.4571
> 2.5 bar: Stainless steel 1.4568

Pressure chamber sealing
NBR

Movement
Copper alloy, wear parts argentan

Dial
Aluminium, white, black lettering

Pointer
Aluminium, black

Case with upper measuring flange
Grey cast iron, black

Window
Instrument glass

Ring
Bayonet ring, stainless steel, black

Filling liquid (for model 423.12)
Glycerine 86.5 %

Options

- Other process connection
- Sealings (model 910.17, see data sheet AC 09.08)
- Wetted parts from stainless steel, pressure chamber sealing from FPM/FKM (model 432.12)
- Overload safety: 10 x full scale value, max. 40 bar
- Vacuum safe to -1 bar
- Open connecting flanges per DIN/ASME from DN 15 to DN 80 (preferred nominal widths DN 25 and 50 or DN 1" and 2" per data sheet IN 00.10)
- Pressure element > 2.5 bar: Stainless steel alloy (Inconel)
- Switch contacts (see data sheet AC 08.01)

Approvals

Logo	Description	Country
	GOST (option) Metrology, measurement technology	Russia
	KazInMetr (option) Metrology, measurement technology	Kazakhstan
-	**MTSCHS (option)** Permission for commissioning	Kazakhstan
	BelGIM (option) Metrology, measurement technology	Belarus
	UkrSEPRO (option) Metrology, measurement technology	Ukraine
	Uzstandard (option) Metrology, measurement technology	Uzbekistan
-	**CPA** Metrology, measurement technology	China
-	**CRN** Safety (e.g. electr. safety, overpressure, ...)	Canada

Certificates (option)

- 2.2 test report
- 3.1 inspection certificate

Approvals and certificates, see website

Dimensions in mm

Standard version

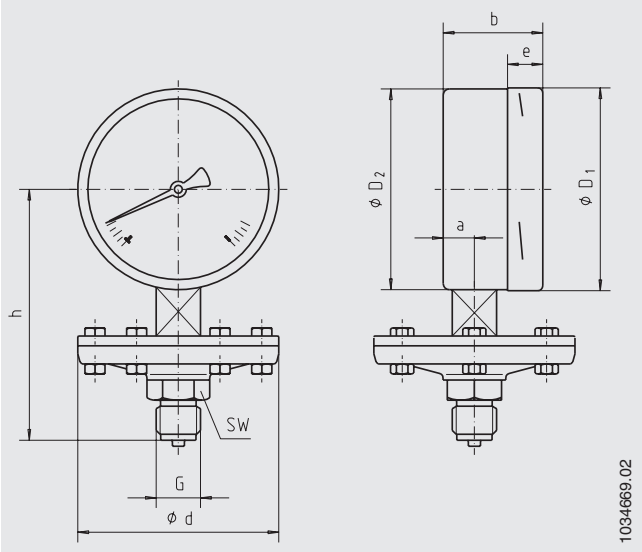

NS	Scale range	Dimensions in mm									Weight
	in bar	d	a	b	D_1	D_2	e	G	h ±2	SW	in kg
100	≤ 0.25	160	15.5	49.5	101	99	17.5	G ½ B	135	27	3.4
160	≤ 0.25	160	15.5	49.5	161	159	17.5	G ½ B	165	27	4.3
100	> 0.25	100	15.5	49.5	101	99	17.5	G ½ B	135	27	2.1
160	> 0.25	100	15.5	49.5	161	159	17.5	G ½ B	165	27	3.0

Process connection per EN 837-3 / 7.3

Ordering information

Model / Scale range / Filling liquid / Process connection / Connection location / Options

WIKA Alexander Wiegand SE & Co. KG
Alexander-Wiegand-Straße 30
63911 Klingenberg/Germany
Tel. +49 9372 132-0
Fax +49 9372 132-406
info@wika.de
www.wika.de